Tel: 1-800-722-8197
1-631-595-2217
Fax: 1-631-667-5484

EMAIL: sales@challelec.com
WEB: www.challengeelectronics.com
ISO 9001/14001:2015 Certified

**INDICATORS • SPEAKERS • SOUND TRANSDUCERS • ENCLOSURES • MICROPHONES • BATTERY ACCESSORIES**

# CS10-00P120-02-2

Former P/N: CES100R028AE8SMN1200SR

**Rev. 3-2019**
**RoHS3 & REACH**
**Round Speakers**

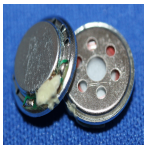

## Operating Characteristics

ELECTRICAL

| | |
|---|---|
| Rated Power | 0.3 W |
| Short Term Max Power | 0.5 W |
| Impedance | 8 Ω ± 15 %<br>2,000 Hz; 0.125 W |

ACOUSTIC: Baffle Board

| | |
|---|---|
| $f_o$ | 1200 Hz ± 20 %<br>0.125 W |
| Freq. Range | 1200 to 6000 Hz |
| Rated SPL | 86 ± 3 dB<br>1000, 1200, 1500, 2000 Hz; 0.3 W; 10 cm; |
| Distortion | <5 %<br>1000 Hz; 0.3 W |

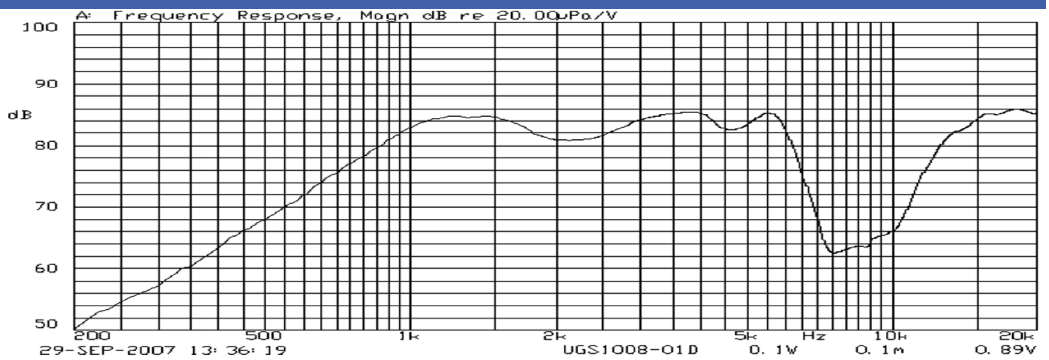


## Physical Characteristics

MATERIALS

| | |
|---|---|
| Housing | Steel |
| Cone | Mylar |
| Magnet | NdFeB |
| Solder Pad | Tin Plated Copper |

TEMPERATURE RANGES

| | |
|---|---|
| Operating | -20 to +60 °C |
| Storage | -20 to +60 °C |

Weight 0.8 g

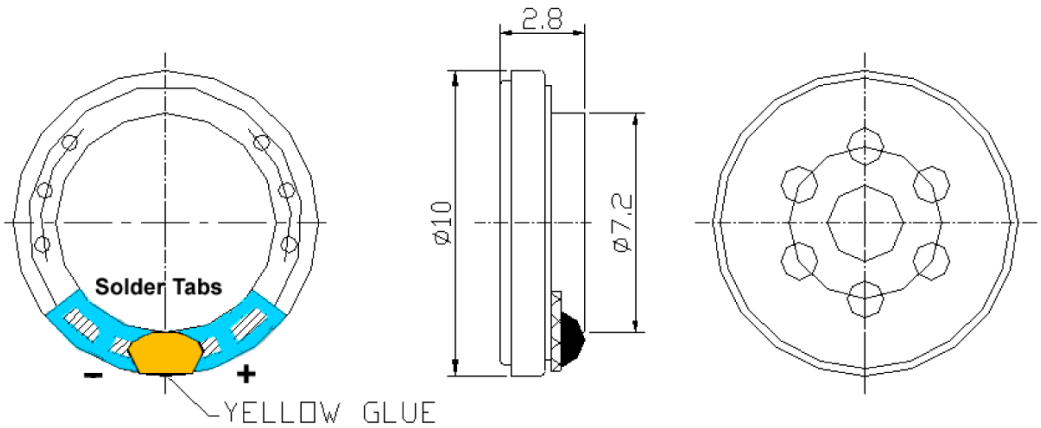


| Revision | Description | By | Date |
|---|---|---|---|
| 2-2015 | Updated SPL measurement condition | WS | 2015-01-22 |
| 3-2019 | Migrate to new format | WS | 2019-06-21 |

Warranty: For a period of one (1) year from date of shipping under normal operations conditions This warranty does not apply to products damaged through misuse, abuse, improper installation, alteration, rework, or attempt to repair.

The information contained herein is believed to be correct, but no guarantee or warranty, express or implied, with respect to accuracy, completeness or results is extended and no liability is assumed. Challenge Electronics reserves the right to make changes in any specification, data or material contained herein.
©2019 Challenge Electronics, Inc. 20190826154536