Tel: 1-800-722-8197
1-631-595-2217
Fax: 1-631-667-5484

EMAIL: sales@challelec.com
WEB: www.challengeelectronics.com
ISO 9001/14001:2015 Certified

CHALLENGE ELECTRONICS

INDICATORS • SPEAKERS • SOUND TRANSDUCERS • ENCLOSURES • MICROPHONES • BATTERY ACCESSORIES

CS12-00R60-02-1X

Former P/N: CS12R-0060-021

Rev. 2-2021
RoHS3 & REACH
IP67 Front Face
Receiver Speakers

Operating Characteristics

ELECTRICAL

Rated Power	0.02 W
Short Term Max Power	0.03 W
Impedance	30 Ω ± 15 % 1000 Hz; 0.001 W

ACOUSTIC: IEC-318 Artificial Ear

f_o	600 Hz ± 20 % 0.001 W
Freq. Range	480 to 7000 Hz
Rated SPL	110 ± 3 dB 1000 Hz; AVG; 0.001 W;
Distortion	Max 8 % 1000 Hz; 0.001 W

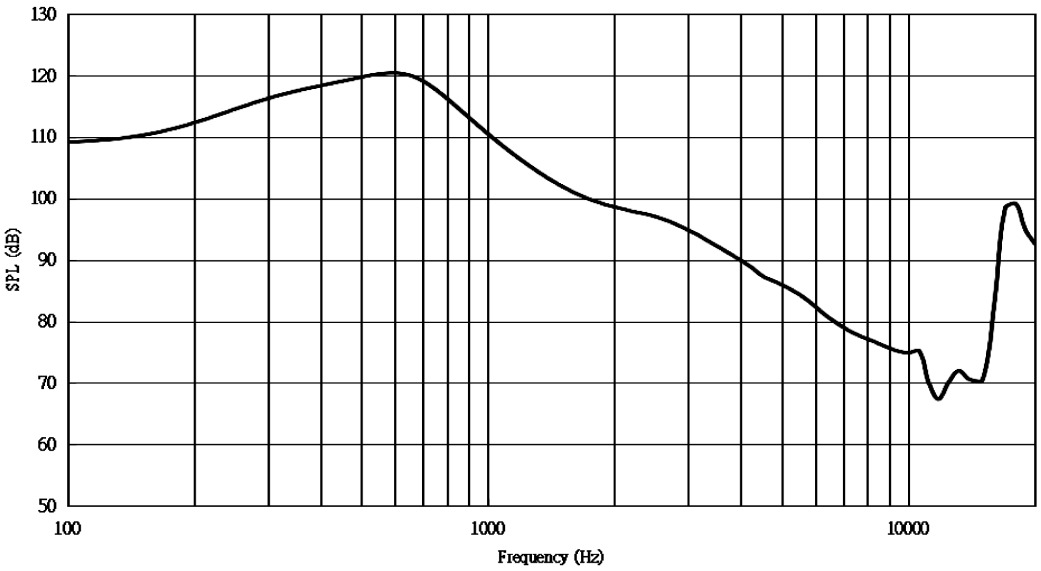

Physical Characteristics

MATERIALS

Housing	Black LCP
Cone	PEEK
Magnet	NdFeB
Spring	Stainless Steel

TEMPERATURE RANGES

Operating	-30 to +70 °C
Storage	-40 to +85 °C

Weight	0.4 g

Unless otherwise specified,tolerance:±0.2 (unit:mm)

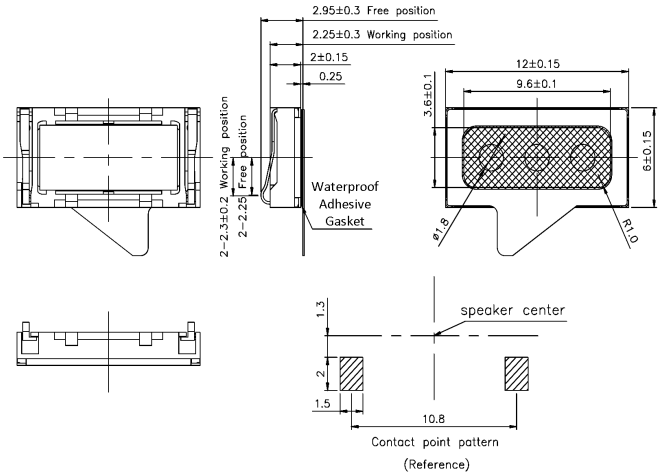

All measurements in mm unless otherwise noted.

Revision	Description	By	Date
1-2020	Corrected mechanical drawing dimension from 0.9 mm radius to 1.0 mm radius and and updated height call-out of 3.05 mm thickness to 2.95 mm thickness without pull tab label.	JL	2020-03-06
2-2021	Updated form factor callout from mobile to receiver.	CT	2021-06-30

Warranty: For a period of one (1) year from date of shipping under normal operations conditions. This warranty does not apply to products damaged through misuse, abuse, improper installation, alteration, rework, or attempt to repair.

The information contained herein is believed to be correct, but no guarantee or warranty, express or implied, with respect to accuracy, completeness or results is extended and no liability is assumed. Challenge Electronics reserves the right to make changes in any specification, data or material contained herein.

©2024 Challenge Electronics, Inc. Pub. 20240411132836