Tel: 1-800-722-8197
1-631-595-2217
Fax: 1-631-667-5484

EMAIL: sales@challelec.com
WEB: www.challengeelectronics.com
ISO 9001/14001:2015 Certified

INDICATORS • SPEAKERS • SOUND TRANSDUCERS • ENCLOSURES • MICROPHONES • BATTERY ACCESSORIES

CS57-02W70-14-1

Former P/N: CES575V1485DA08PCN700W45R

Rev. 1-2019
RoHS3 & REACH
Oval Speakers

Operating Characteristics

ELECTRICAL

Rated Power	2.0 W
Short Term Max Power	3.0 W
Impedance	8 Ω ± 15 % 1000 Hz; 0.25 W

ACOUSTIC: Baffle Board

f_o	700 Hz ± 20 % 0.125 W
Freq. Range	700 to 20000 Hz
Rated SPL	98 ± 3 dB 800, 1000, 1200, 1500 Hz; 1.0 W; 10 cm;
Distortion	10 % 1000 Hz; 1 W

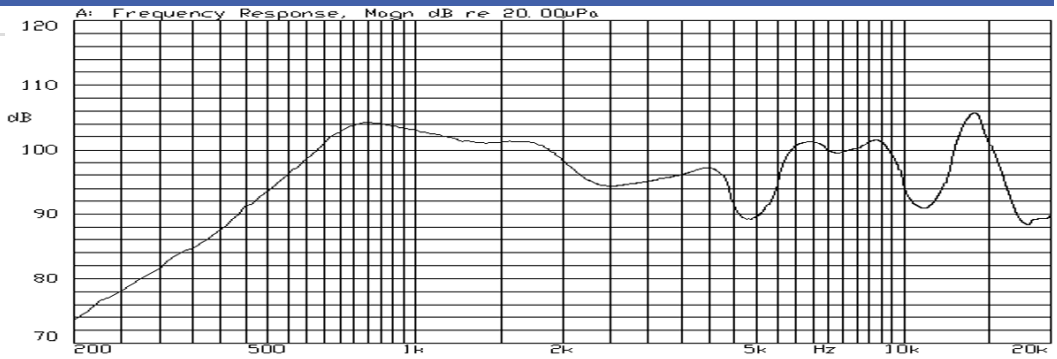

Physical Characteristics

MATERIALS

Housing	Plastic
Cone	Cloth
Magnet	NdFeB
Wire	UL 1061, 26 AWG

TEMPERATURE RANGES

Operating	-20 to +60 °C
Storage	-20 to +60 °C

Weight 28 g

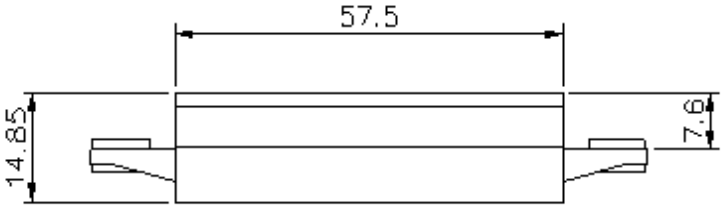

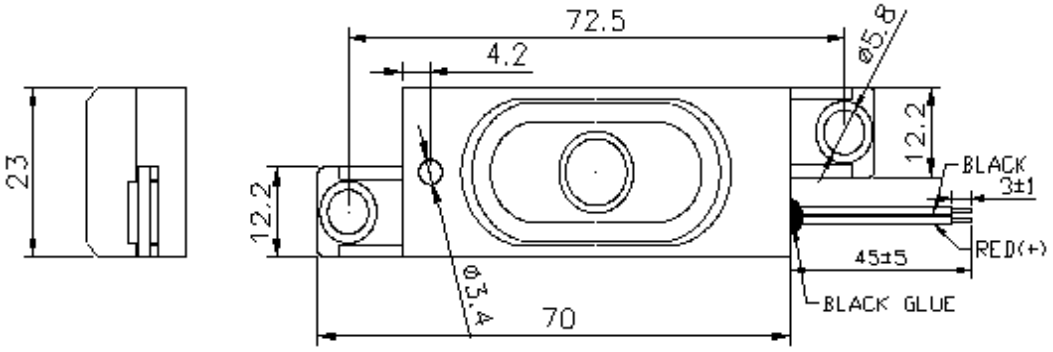

Revision	Description	By	Date
1-2019	Migrate to new format	JL	2019-06-21

Warranty: For a period of one (1) year from date of shipping under normal operations conditions This warranty does not apply to products damaged through misuse, abuse, improper installation, alteration, rework, or attempt to repair.

The information contained herein is believed to be correct, but no guarantee or warranty, express or implied, with respect to accuracy, completeness or results is extended and no liability is assumed. Challenge Electronics reserves the right to make changes in any specification, data or material contained herein.
©2019 Challenge Electronics, Inc. 20190826155210