Tel: 1-800-722-8197
1-631-595-2217
Fax: 1-631-667-5484

EMAIL: sales@challelec.com
WEB: www.challengeelectronics.com
ISO 9001/14001:2015 Certified

INDICATORS • SPEAKERS • SOUND TRANSDUCERS • ENCLOSURES • MICROPHONES • BATTERY ACCESSORIES

CS87-08D40-28-1

Former P/N: CES870S285KG08SMN400TGR

Rev. 2-2020
RoHS3 & REACH
Square Speakers

Operating Characteristics

ELECTRICAL

Rated Power	8 W
Short Term Max Power	16 W
Impedance	8 Ω ± 15 % 1000 Hz; 0.125 W

ACOUSTIC: Baffle Board

f_o	400 Hz ± 20 % 0.125 W
Freq. Range	400 to 6000 Hz
Rated SPL	87 ± 3 dB 400, 600, 800, 1000, 1500 Hz; 1.0 W; 100 cm;
Distortion	<5 % 1000 Hz; 1 W

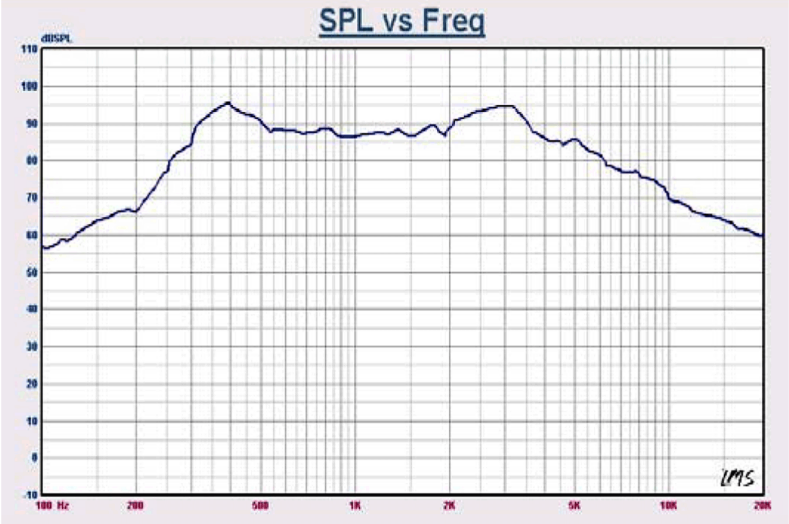

Physical Characteristics

MATERIALS

Housing	Steel
Cone	Mylar
Magnet	NdFeB
Solder Tab	Tin Plated Iron

TEMPERATURE RANGES

Operating	-25 to +65 °C
Storage	-30 to +70 °C

Weight	102 g

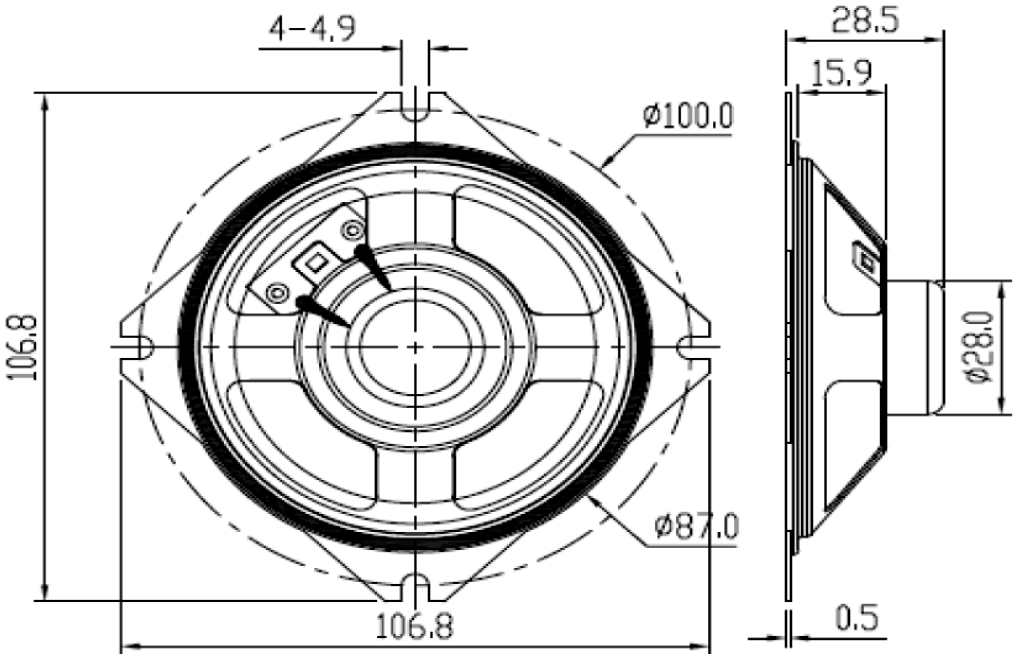

Revision	Description	By	Date
1-2019	Migrate to new format	WS	2019-06-21
2-2020	Updated PN from CS106-08D40-28-1 to CS87-08D40-28-1.	JL	2020-03-02

Warranty: For a period of one (1) year from date of shipping under normal operations conditions This warranty does not apply to products damaged through misuse, abuse, improper installation, alteration, rework, or attempt to repair.

The information contained herein is believed to be correct, but no guarantee or warranty, express or implied, with respect to accuracy, completeness or results is extended and no liability is assumed. Challenge Electronics reserves the right to make changes in any specification, data or material contained herein.
©2020 Challenge Electronics, Inc. Pub. 20200306120441